Mamos example installation - Compact configuration

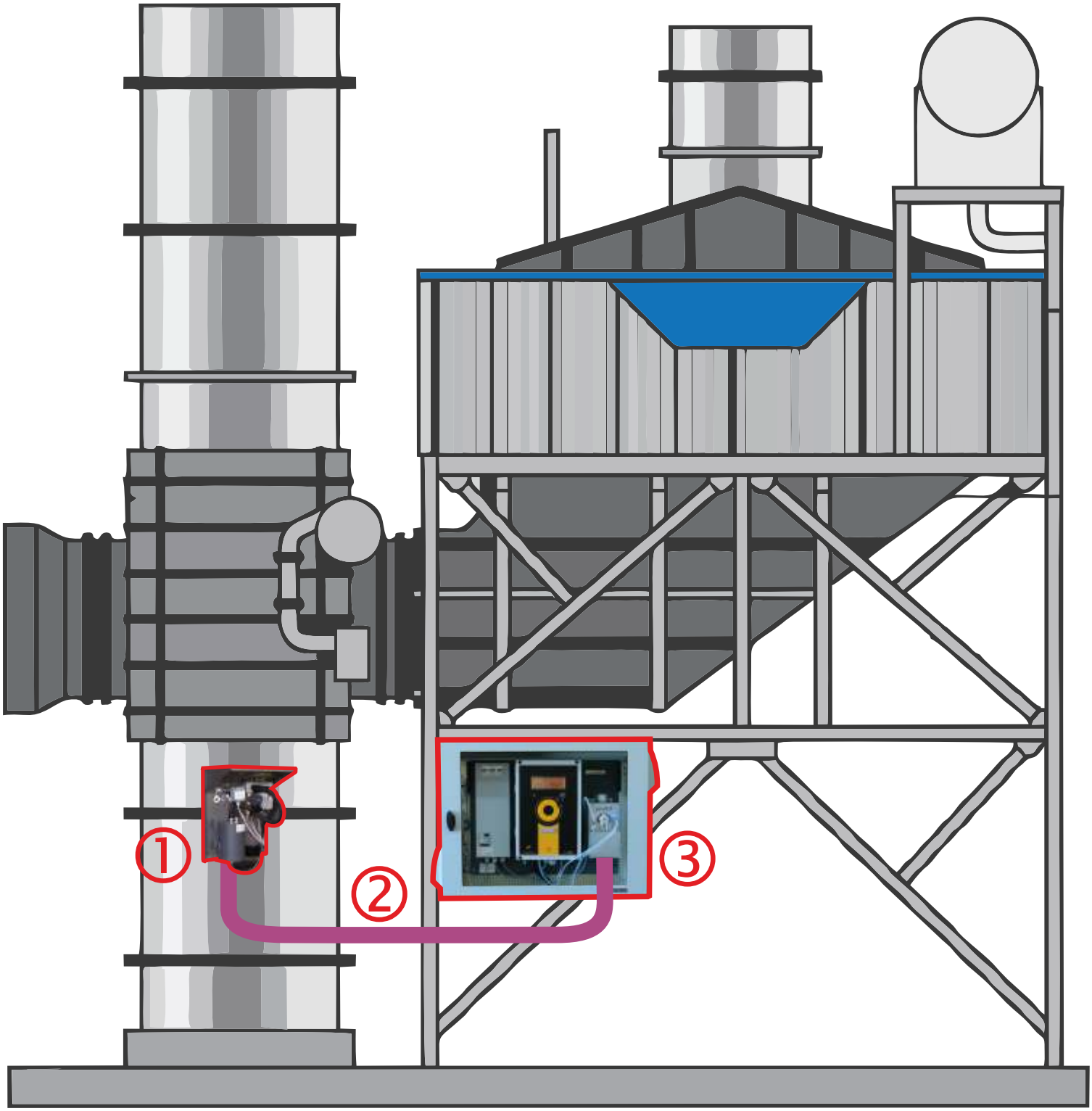

1. Stationary gas probe with optional heated filter.
2. Fairly short (3÷10m) heated line.
   Longer lines are possible by connecting two or more sections of heated lines. Though, such solution is expensive, and it is more advised to use split or twin split configurations.
3. Mamos analyser. Should be installed in close proximity to measurement point.
   Optionally available in IP55 cabinet with also optional air conditioning unit.

Mamos example installation - Split configuration

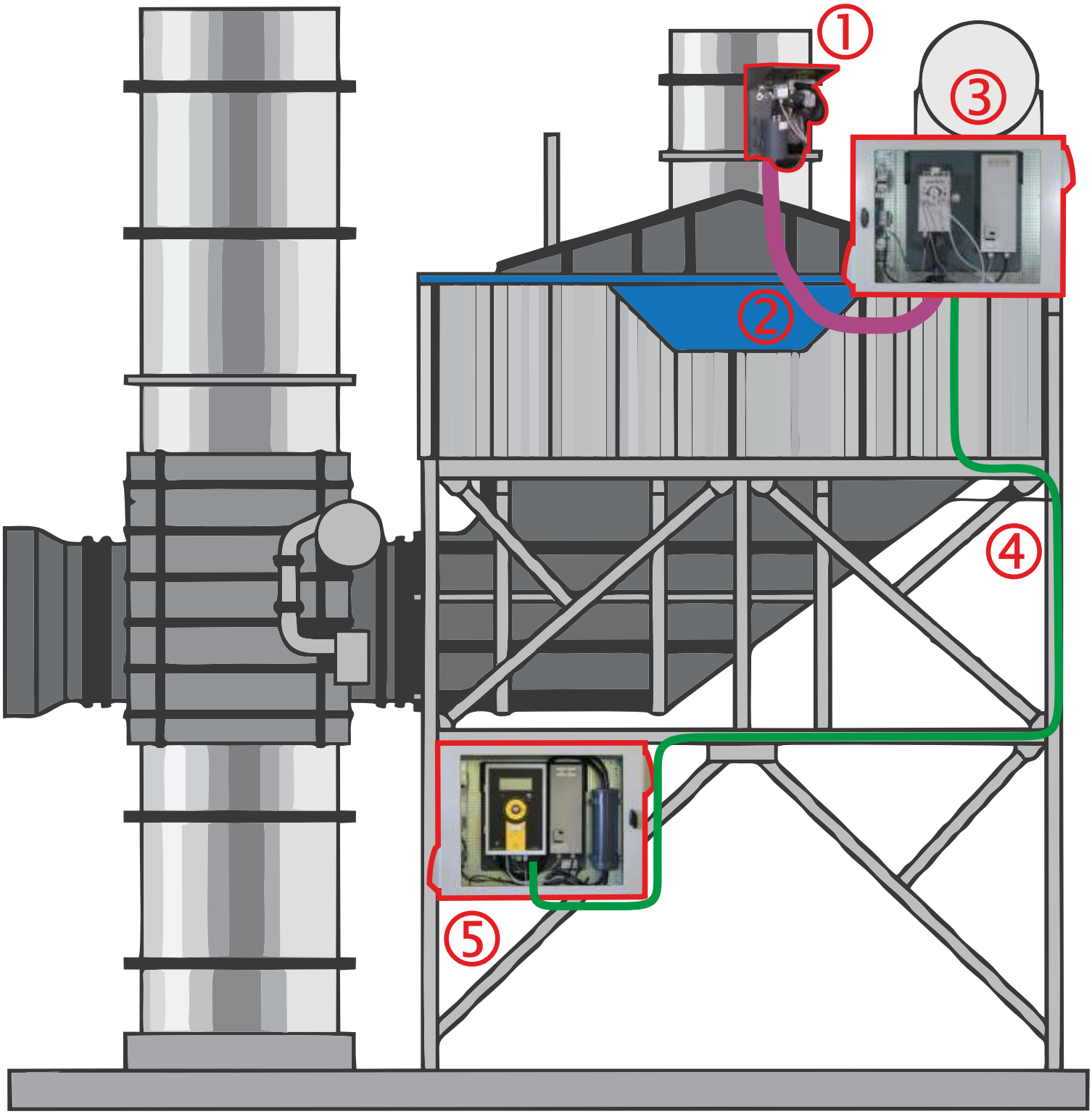

1. Stationary gas probe with optional heated filter.
2. Fairly short (3÷10m) heated line (to reduce the cost of entire installation)
3. Gas dryer installed in close distance to gas sampling point.
   Optionally available in IP55 cabinet with also optional air conditioning unit.
4. Dry gas and electric connection cable. Connects gas dryer and mamos analyser.
   Dry gas line can be long, distances up to 100m or longer if necessary.
5. Mamos analyser installed in convenient location (e.g. in operation shed). May be in remote distance from measurement place.
   Optionally available in IP55 cabinet with also optional air conditioning unit.

Mamos example installation - Twin-Split configuration

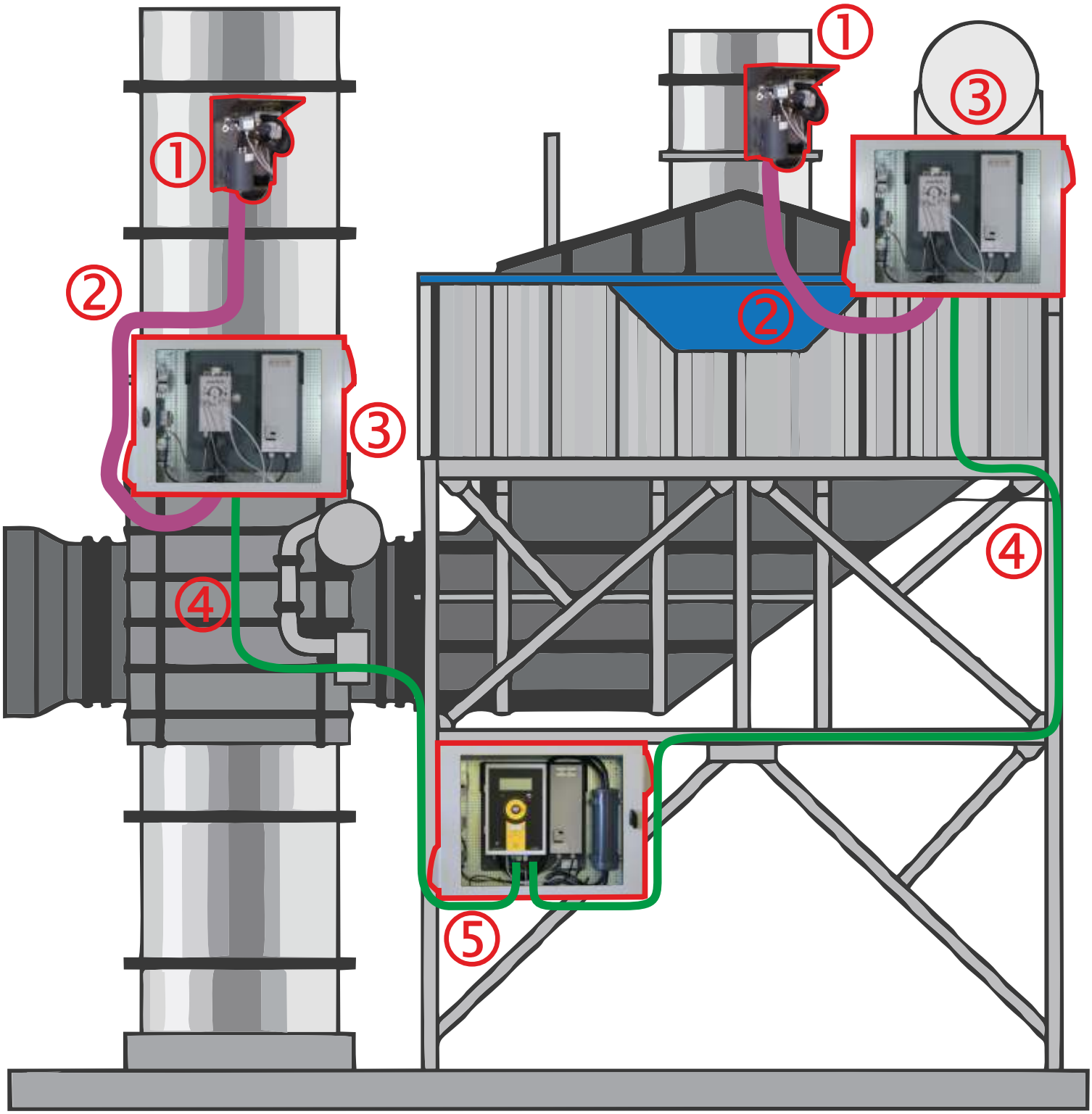

1. Stationary gas probe with optional heated filter.
2. Fairly short (3÷10m) heated line (to reduce the cost of entire installation)
3. Gas dryer installed in close distance to gas sampling point.
   Optionally available in IP55 cabinet with also optional air conditioning unit.
4. Dry gas and electric connection cable. Connects gas dryer and mamos analyser.
   Dry gas line can be long, distances up to 100m or longer if necessary.
5. Mamos analyser installed in convenient location (e.g. in operation shed). May be in remote distance from measurement place.
   Optionally available in IP55 cabinet with also optional air conditioning unit.

Mamos example installation - Mixed configuration
Twin-Split: Compact analyser with remote dryer

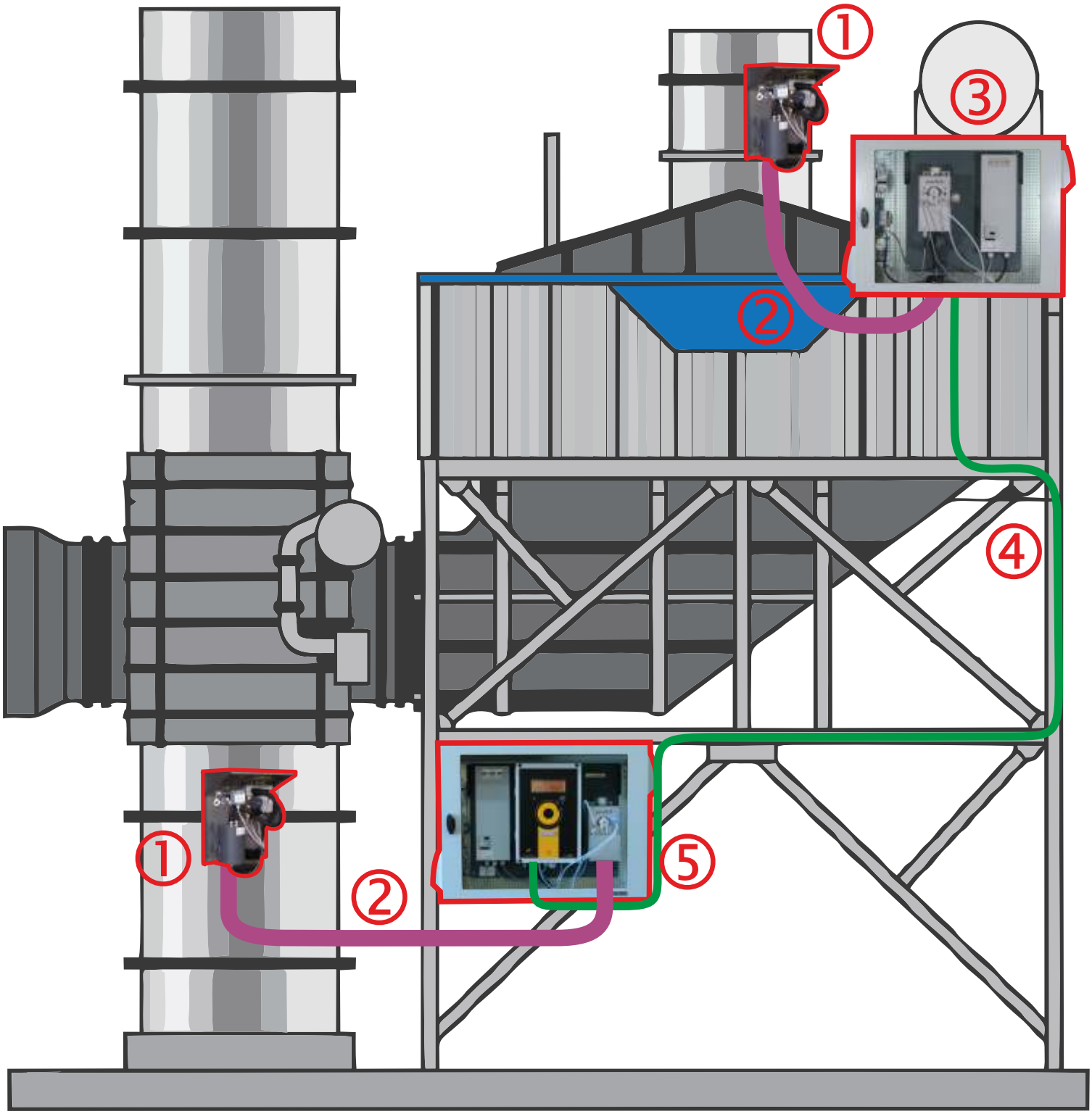

1. Stationary gas probe with optional heated filter.
2. Fairly short (3÷10m) heated line (to reduce the cost of entire installation)
3. Gas dryer installed in close distance to gas sampling point.
   Optionally available in IP55 cabinet with also optional air conditioning unit.
4. Dry gas and electric connection cable. Connects gas dryer and mamos analyser.
   Dry gas line can be long, distances up to 100m or longer if necessary.
5. Mamos analyser. Should be installed in close proximity to one of the measurement point.
   Optionally available in IP55 cabinet with also optional air conditioning unit.

Mamos example installation - Multiplexed configuration

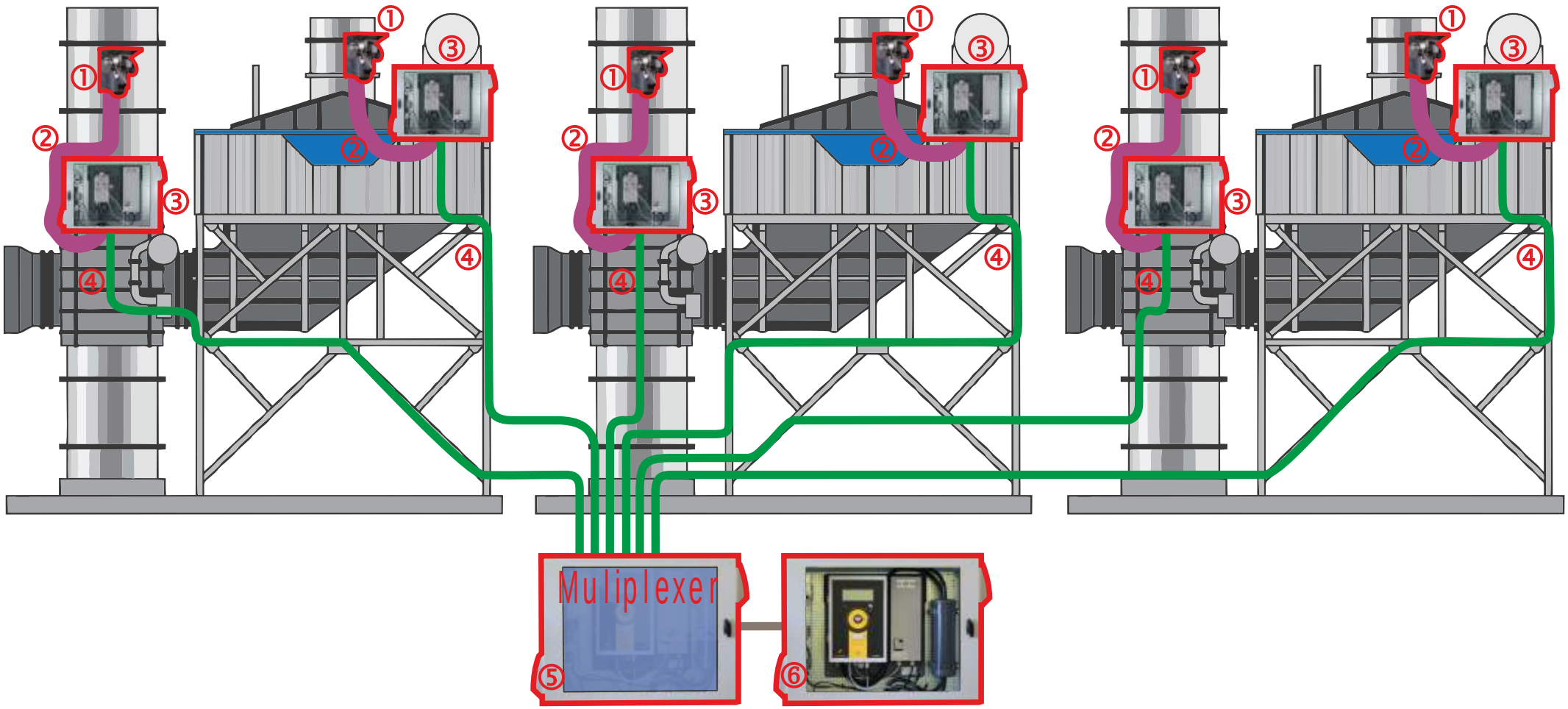

1. Stationary gas probe with optional heated filter.
2. Fairly short (3÷10m) heated line (to reduce the cost of entire installation)
3. Gas dryer installed in close distance to gas sampling point. Optionally available in IP55 cabinet with also optional air conditioning unit.
4. Dry gas and electric connection cable. Connects gas dryers and multiplexer. Dry gas line can be long, distances up to 100m or longer if necessary.
5. Gas Multiplexer. Allows to perform measurements from more than two places (maximum sampling points to be determined).
   Multiplexer controls from where mamos analyser is currently measuring. Optionally available in IP55 cabinet with also optional air conditioning unit.
6. Mamos analyser installed in convenient location (e.g. in operation shed). May be in remote distance from measurement place.
   Optionally available in IP55 cabinet with also optional air conditioning unit.